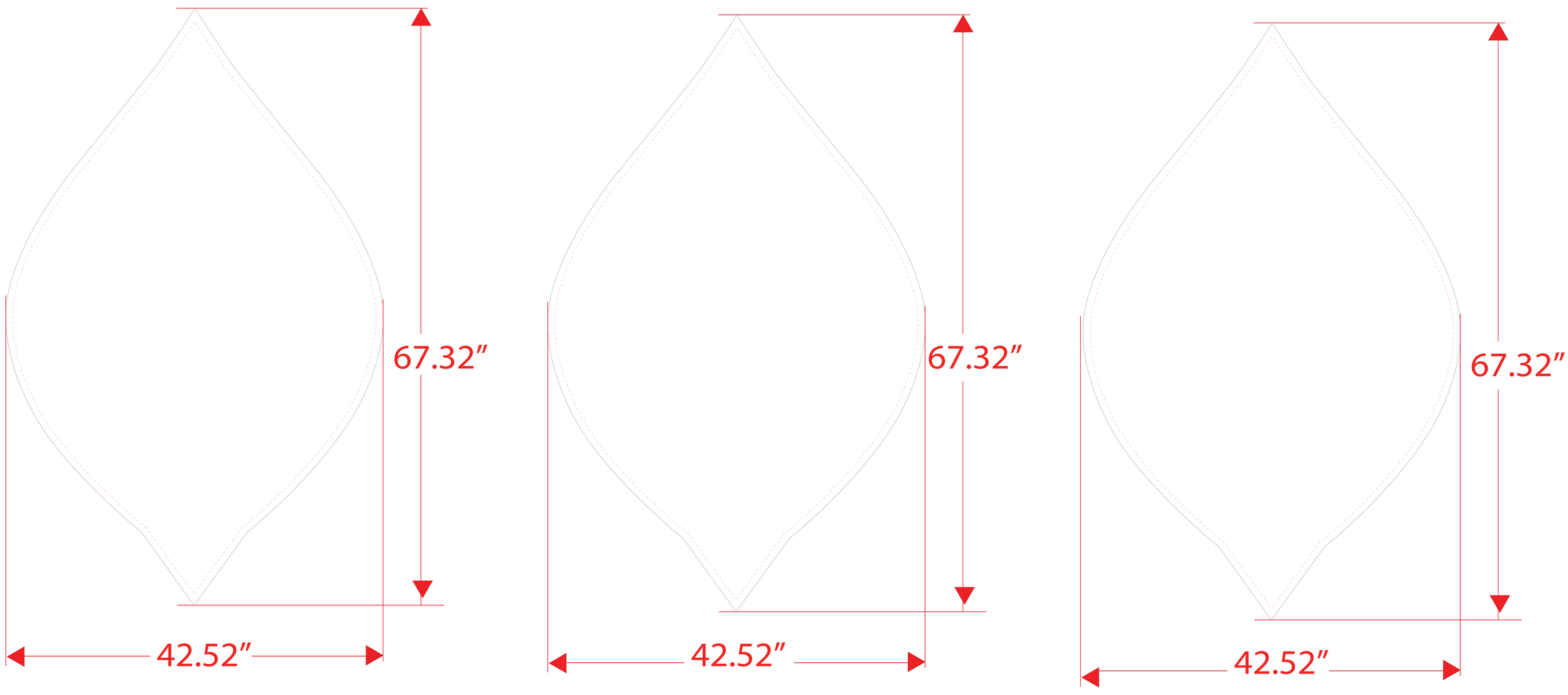67.32″X42.52″X3PCS