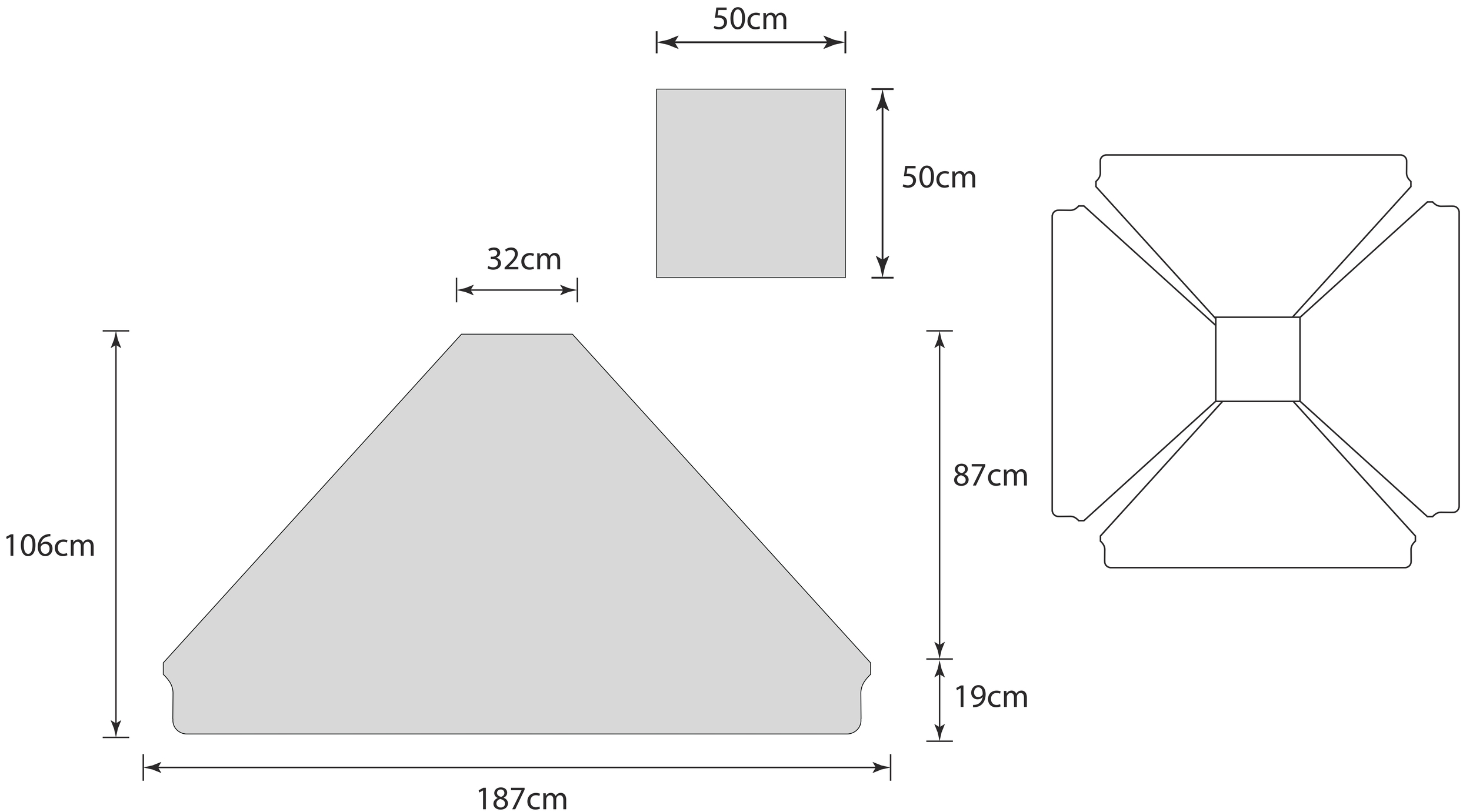

TMP SQUARE 6.5'x6.5' UMBRELLA WITH VALENCES TEMPLATE

TIPS: 1. Please place your main artwork inside the grey area